Acme Sanitary Ware Co. Ltd.
1/F, Acme Building, 22-28 Nanking Street, Kowloon, Hong Kong
Tel: 2388 7171 Fax: 2710 8012
Email: acme@acmesanitary.com.hk
Website: www.acmesanitary.com.hk
Since 1949

EMCA

PROJECT		REF		REV	ITEM CODE	
LOCATION		DATE			PAGE	

SANITARY WARE SPECIFICATION SHEET

Item Descriptions	EMCA (Taiwan) ABS shower head holder for Ø34mm grab bar	Illustration/ Drawing
Dimensions	L128 x W128 x D58 mm	
Model	EM8013.040	
Finish	Smooth abs surface	
Manufacturer	EMCA (Taiwan)	
Source	Acme Sanitary Ware Co. Ltd Mr. Eric Wong/ Mr. Don Yuen	
Contact Tel/Fax E-mail Website	(852) 2388-7171 / (852) 2710-8012 acme@acmesanitary.com.hk www.acmesanitary.com.hk	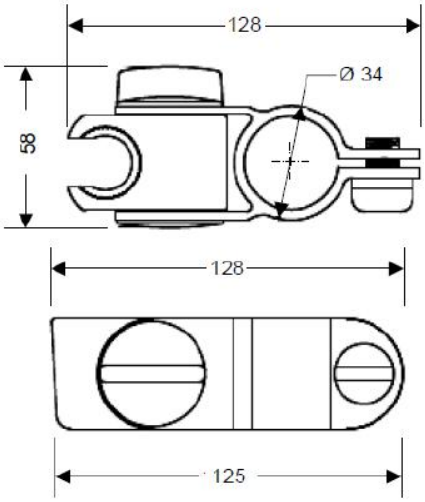

Note:

** All information of the above is for the reference only. No prior notice is made if any changes.*